Roca

BEYOND

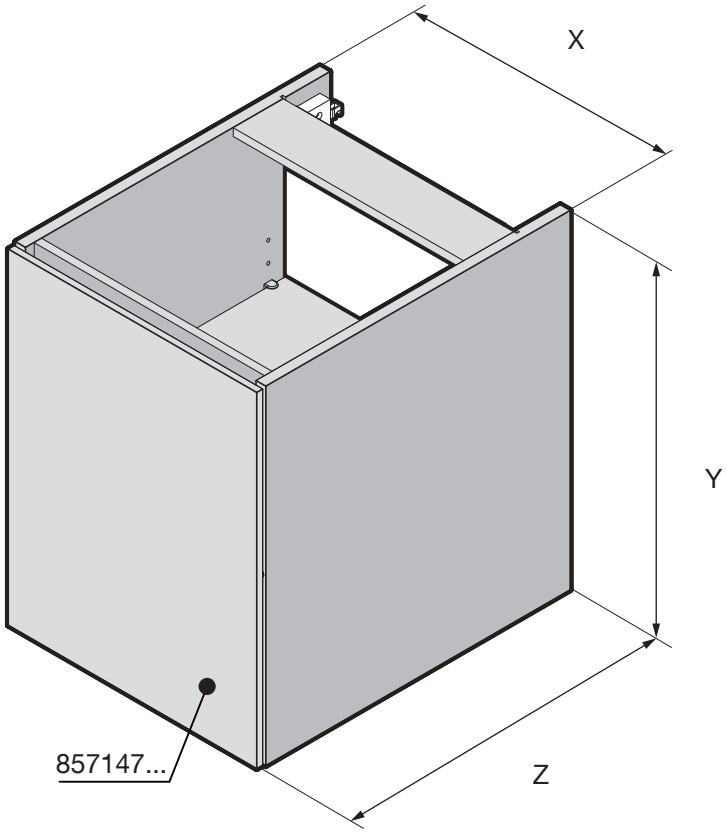

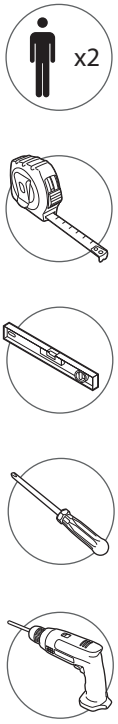

	mm		
	X	Y	Z
857147...	400	525	500

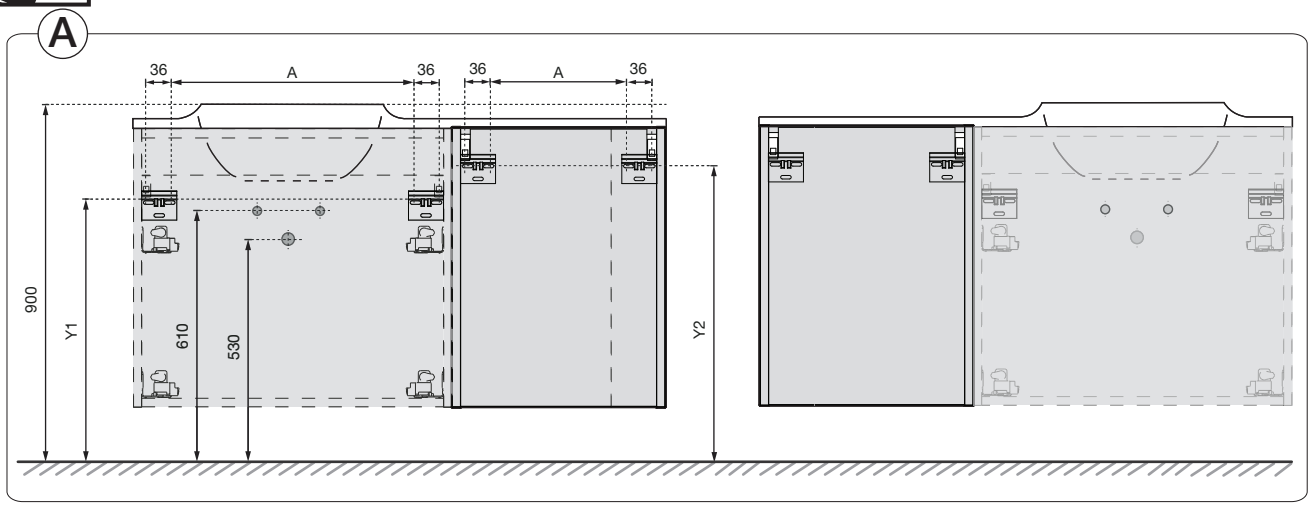

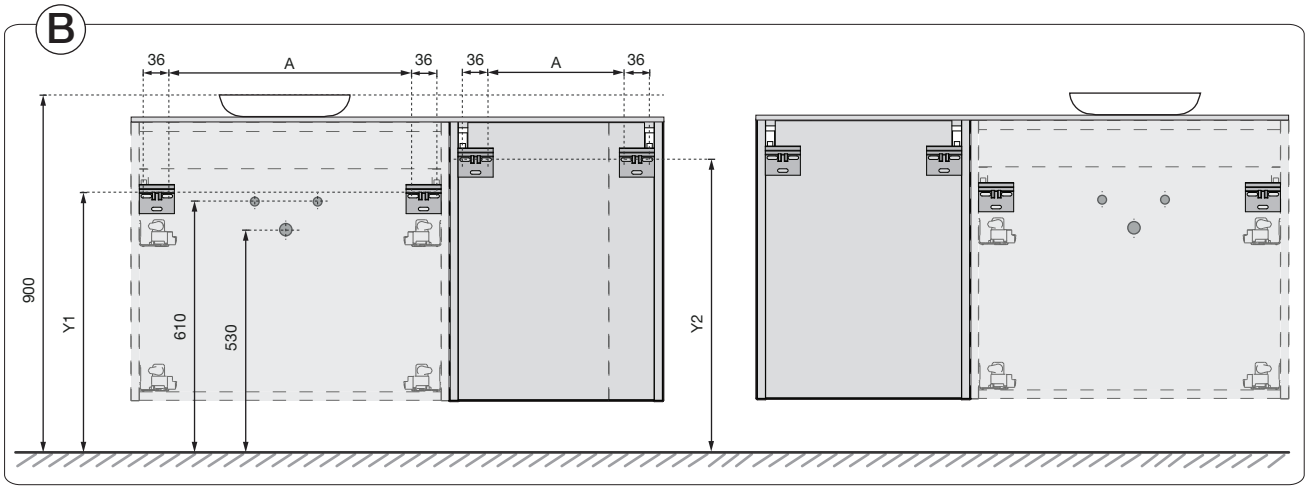

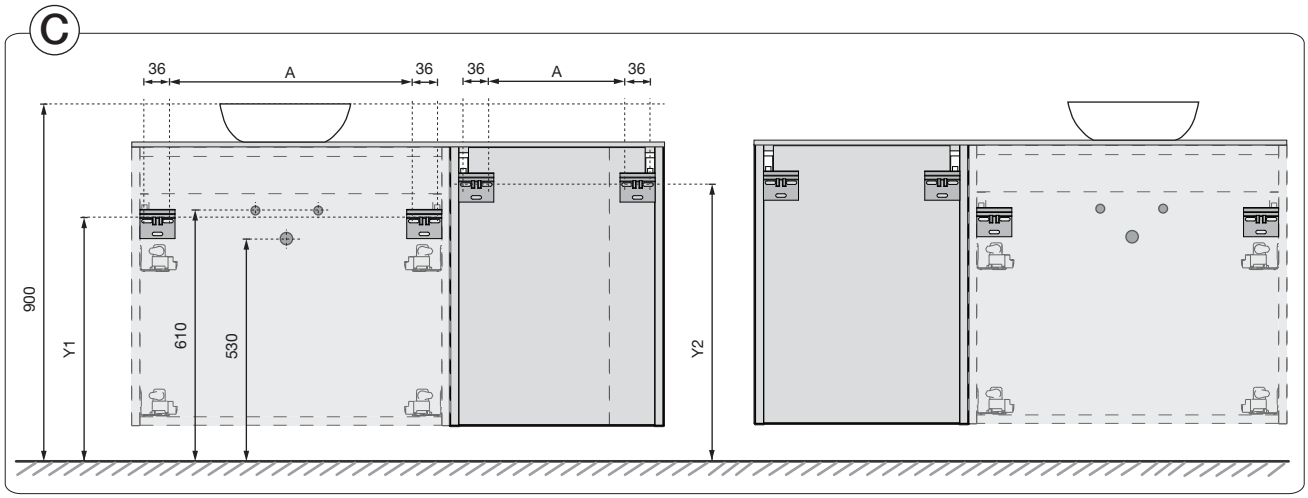

			A	B	C
				60 mm	150 mm
		A			
Y1	857144...	468	720	705	615
	857145...	668			
	857146...	868			
Y2	857147...	368	787	772	682
	857149...	368			

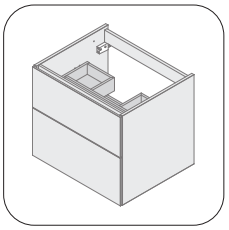

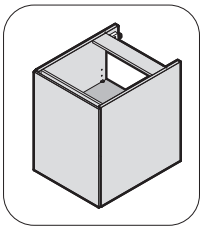

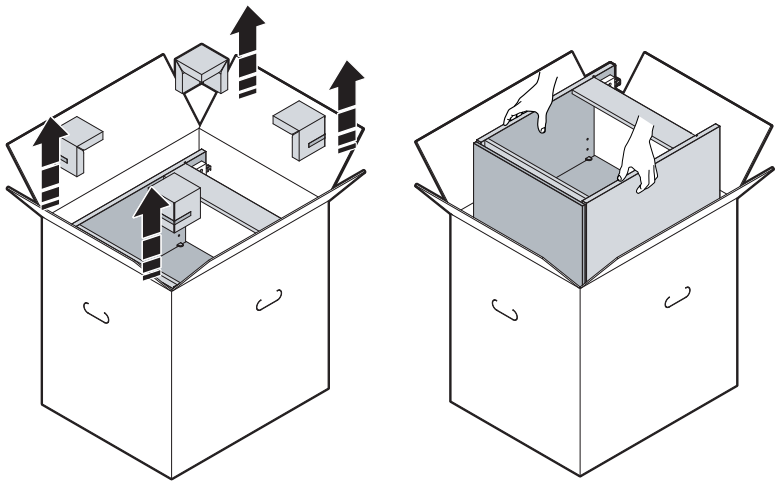

x2

2

x2

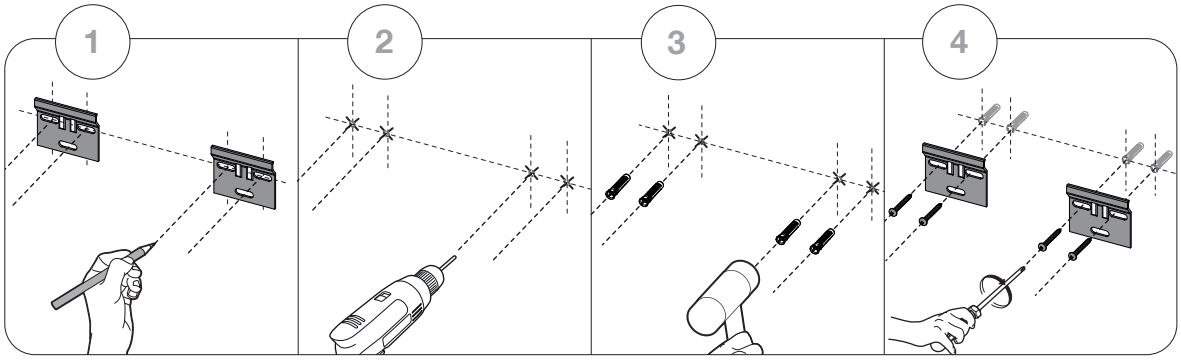

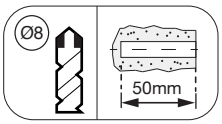

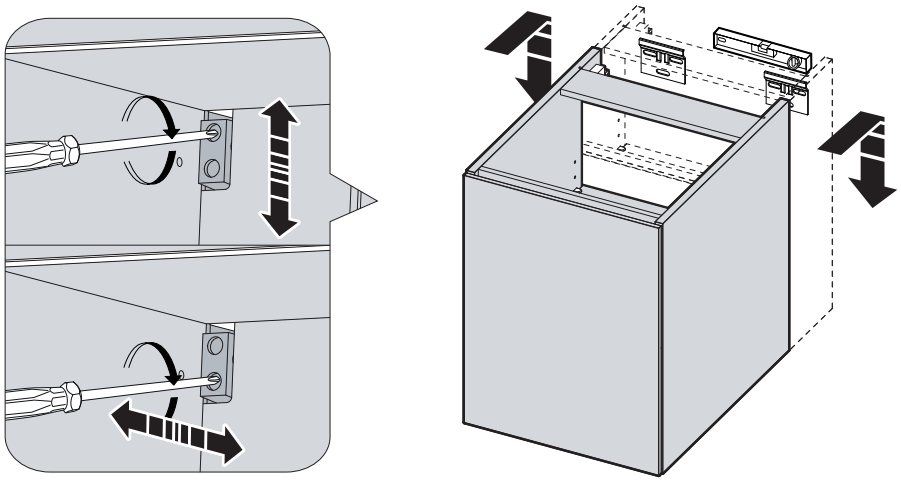

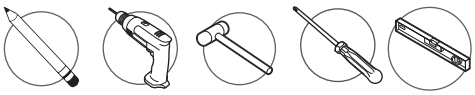

3

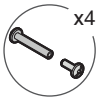

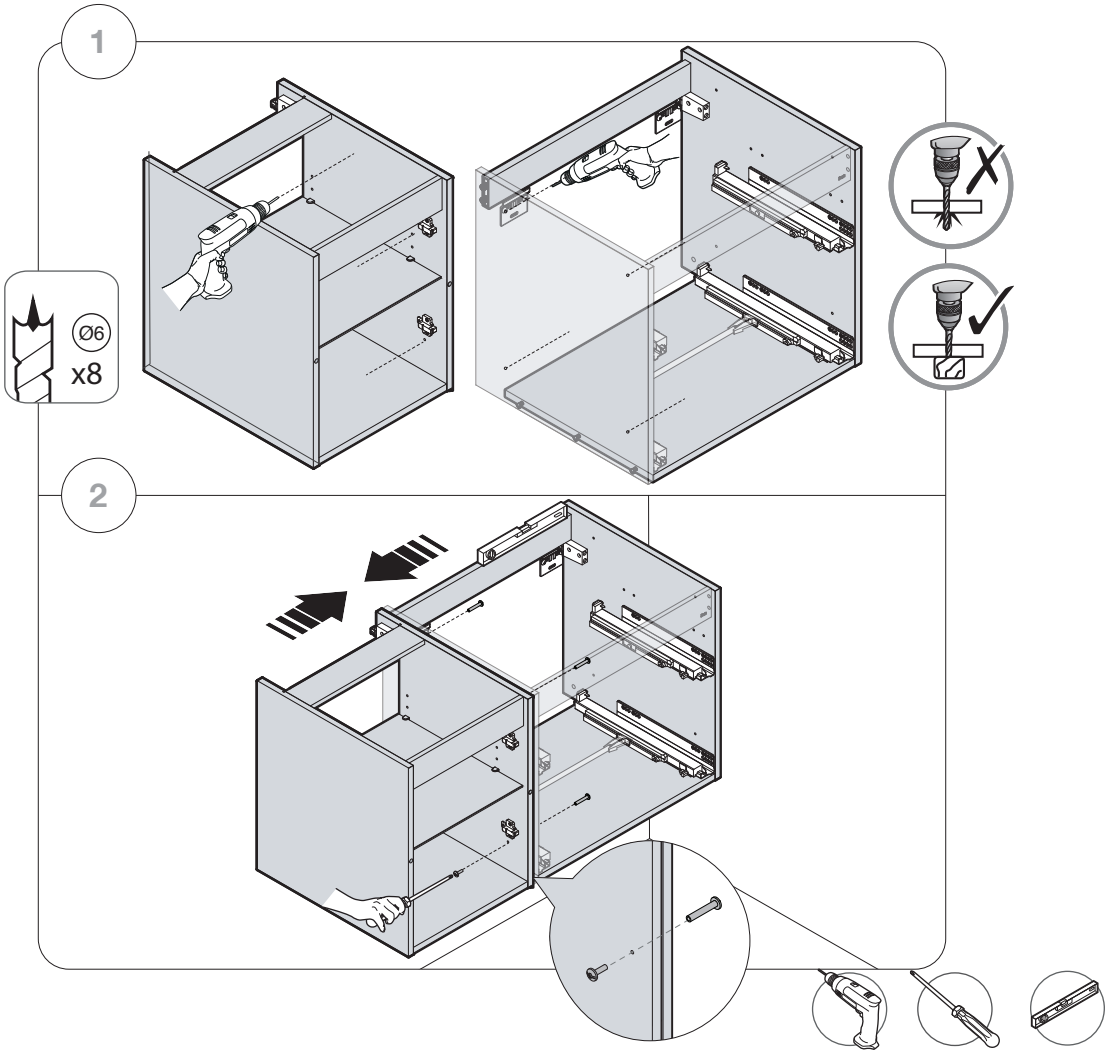

4

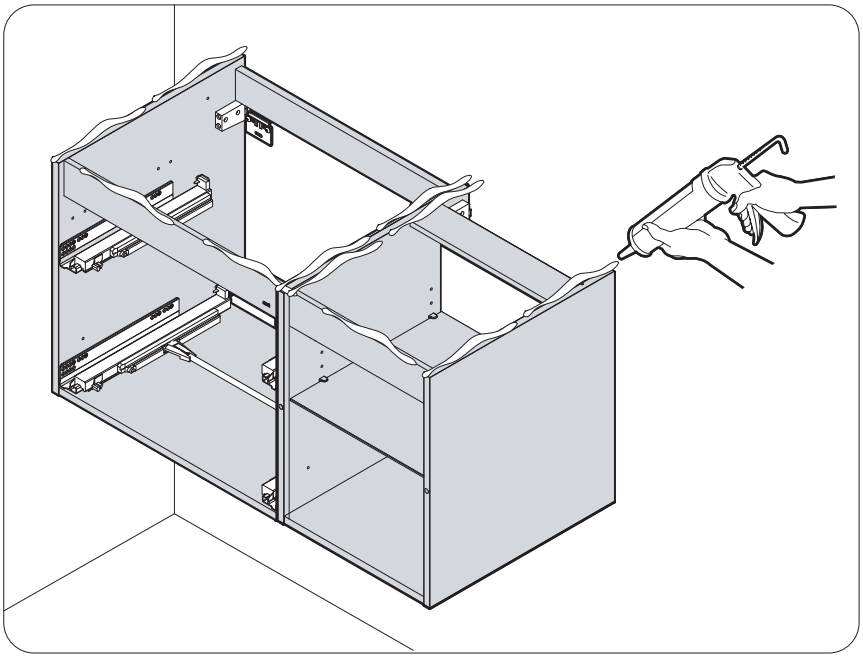

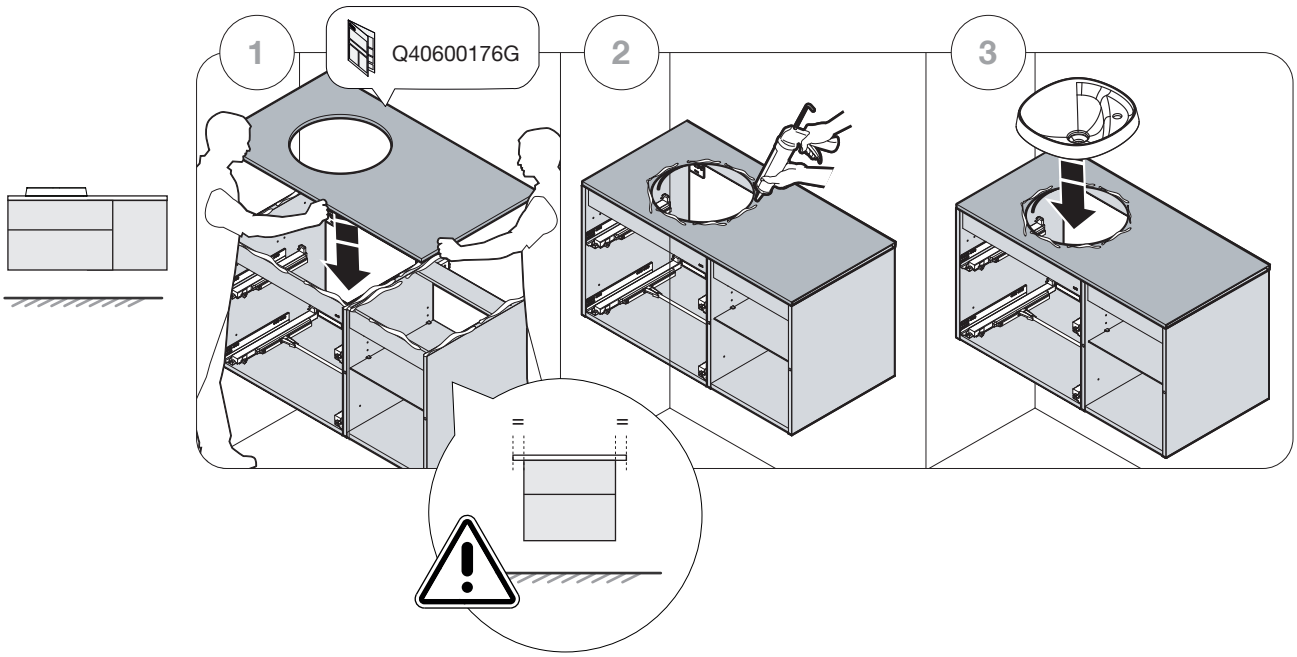
1
Q40600176G
2
3

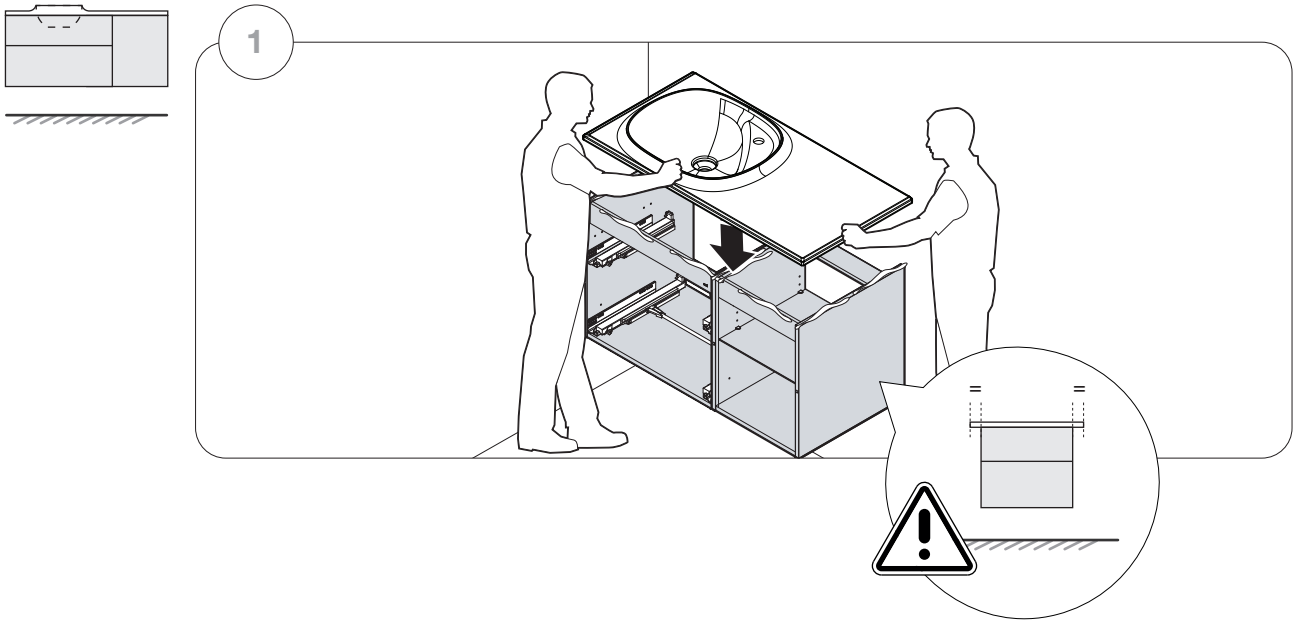
1

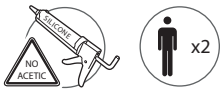
SILICONE
NO ACETIC
x2

5

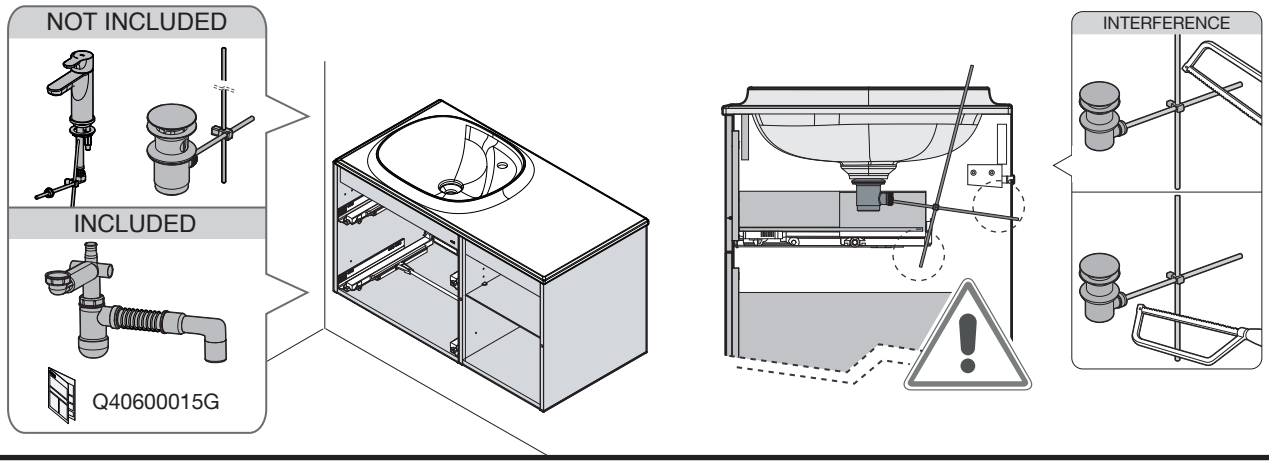
NOT INCLUDED
INCLUDED
Q40600015G
INTERFERENCE

6

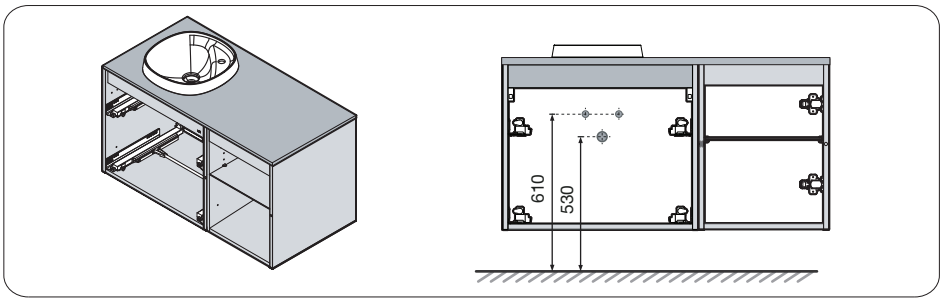

7

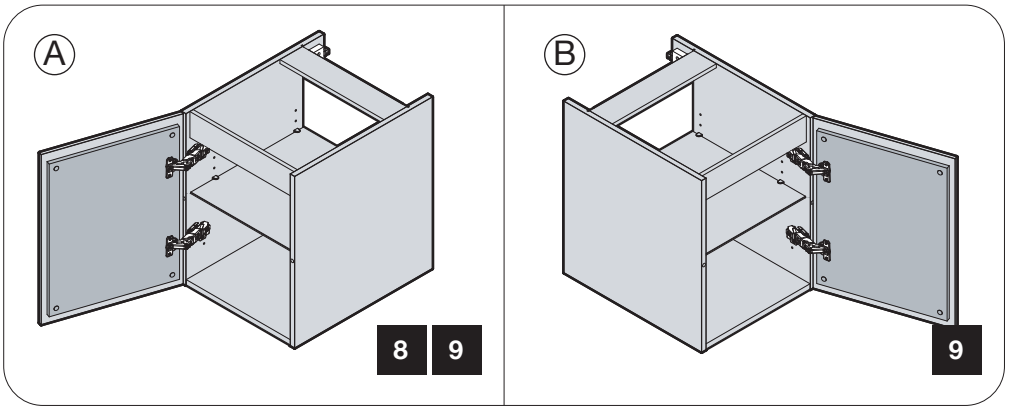

8

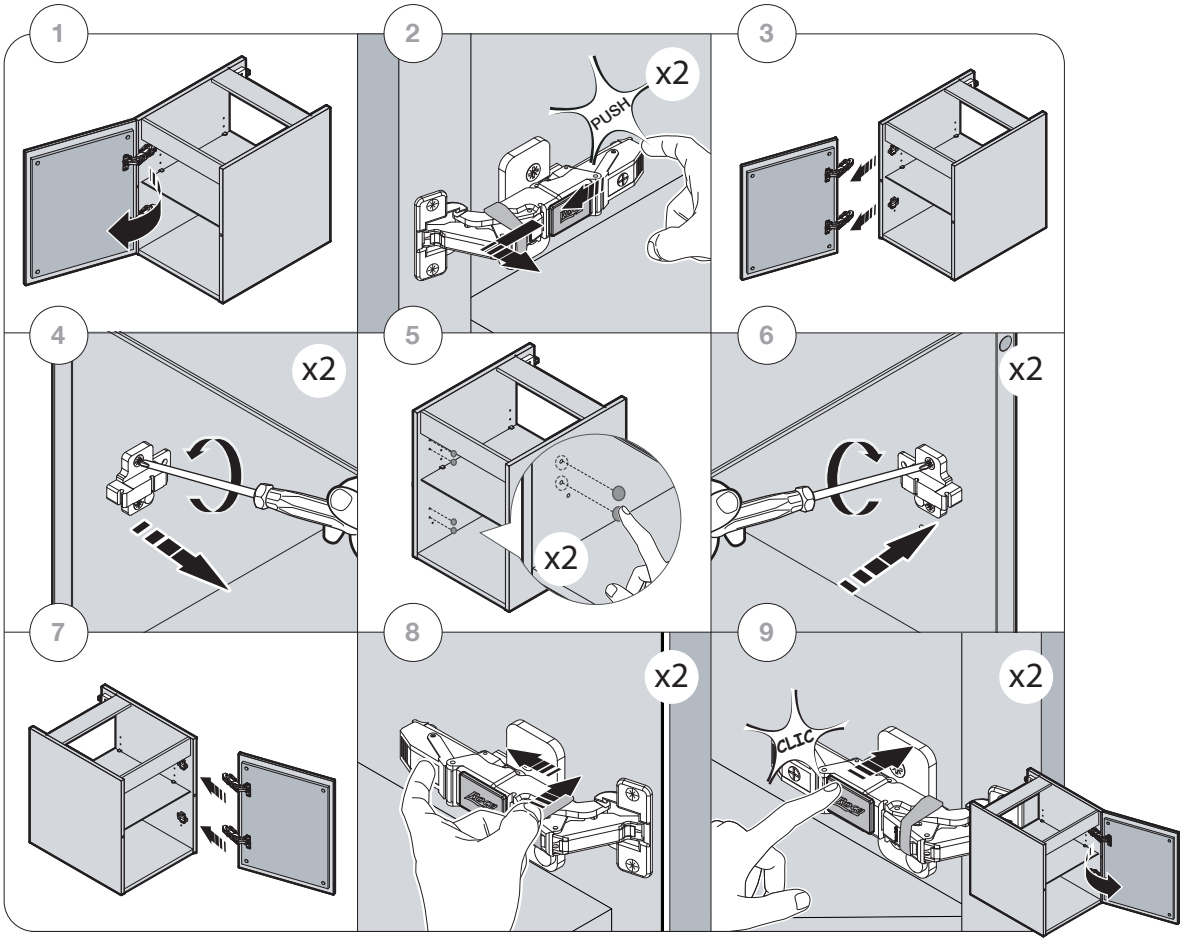

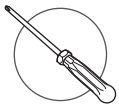

9

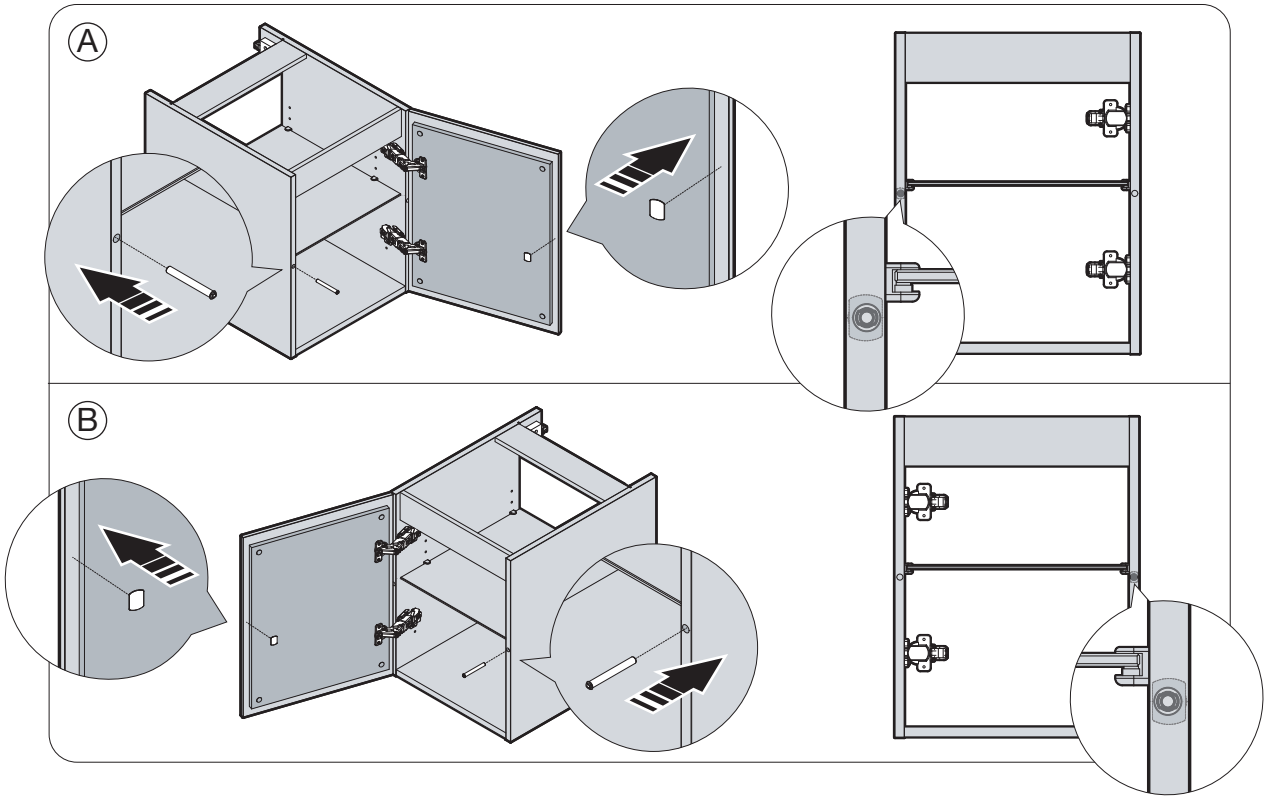

10

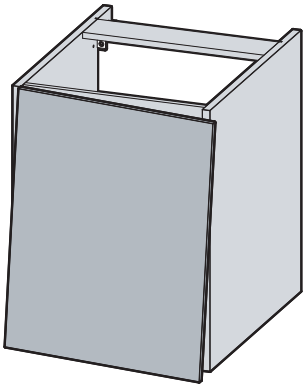

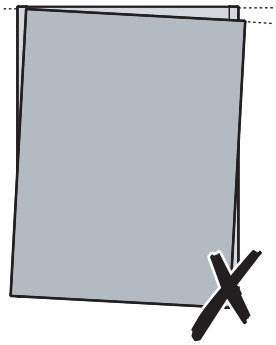

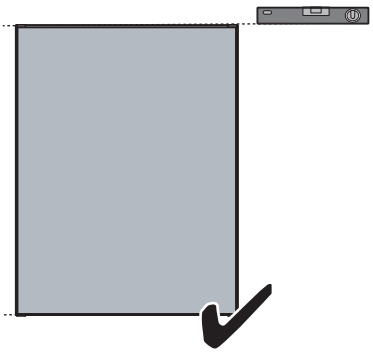

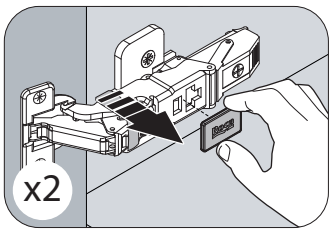

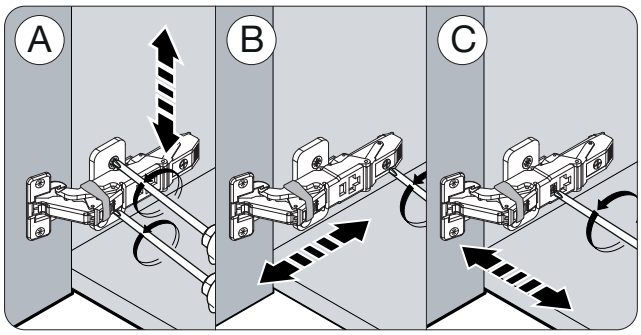

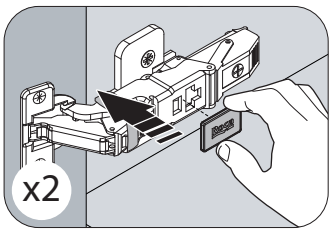

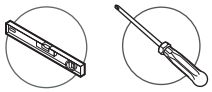

OPTIONAL

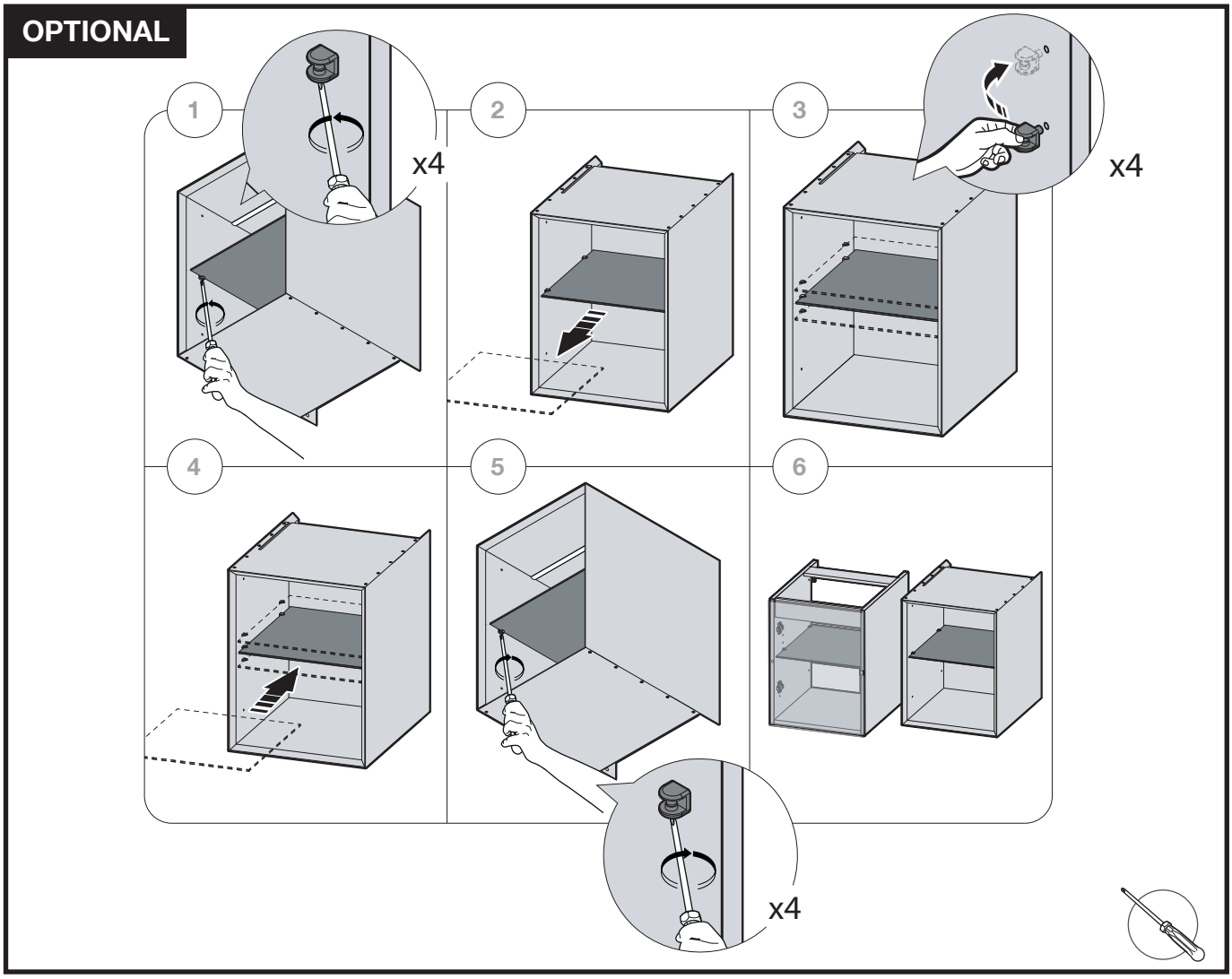

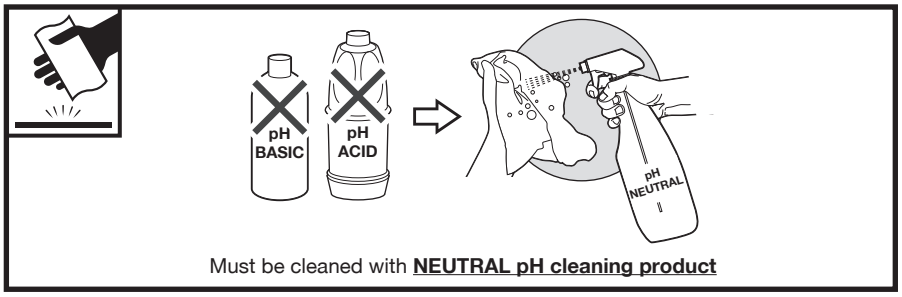

Must be cleaned with **NEUTRAL pH cleaning product**

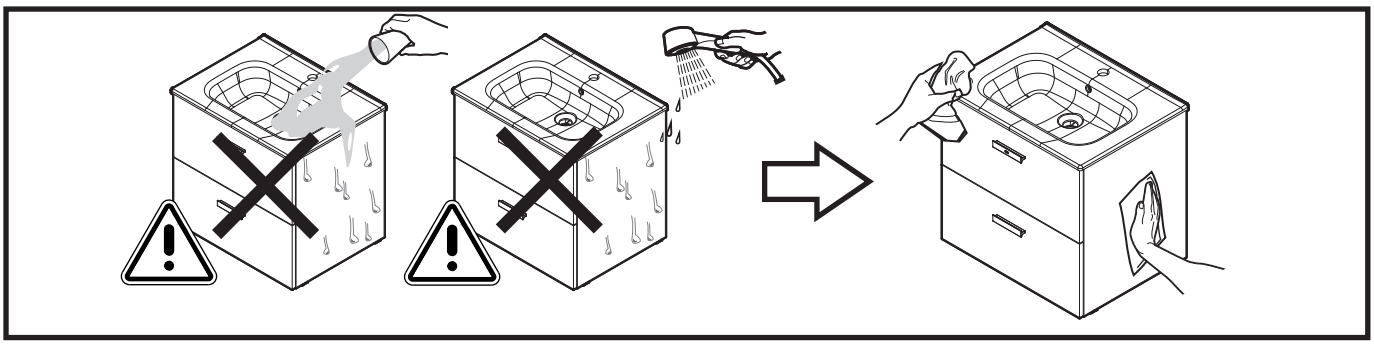

DIN A3

1181426-01 Q40600142G-e

Roca

Roca Sanitario, S.A.
Avda. Diagonal, 513
08029 Barcelona
SPAIN
www.roca.com

933 661 266
LÍNEA DE ATENCIÓN AL CONSUMIDOR ESPAÑA
SERVICIO TÉCNICO ESPAÑA

productsupport.rs@roca.net
soporteproducto.rs@roca.net